INSTALLATION GUIDE
EVEREST DC Ceiling Fan

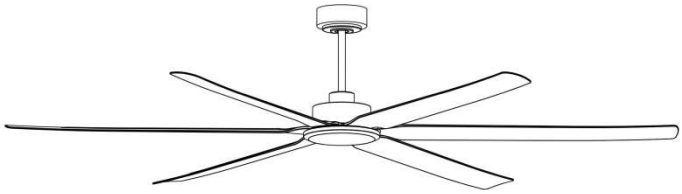

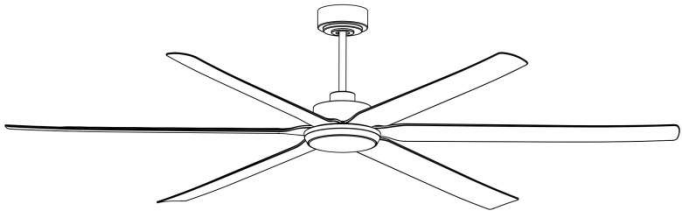

Model Parameters (Fan Only):-

4S1710WH	2050mm 6 Blade All ABS WIFI & Remote Control Ceiling Fan Matt White
4S1710BK	2050mm 6 Blade All ABS WIFI & Remote Control Ceiling Fan Matt Black

Model Parameters (Fan and LED Light):-

4S1711WH	2050mm 6 Blade All ABS WIFI & Remote Control Ceiling Fan with Variable Dim 24w CCT LED Light Matt White
4S1711BK	2050mm 6 Blade All ABS WIFI & Remote Control Ceiling Fan with Variable Dim 24w CCT LED Light Matt Black

Models Parameters (ABS Blades):-

4S1712WH	2050mm 6 ABS Blades Only Matt White
4S1712BK	2050mm 6 ABS Blades Only Matt Black

Application

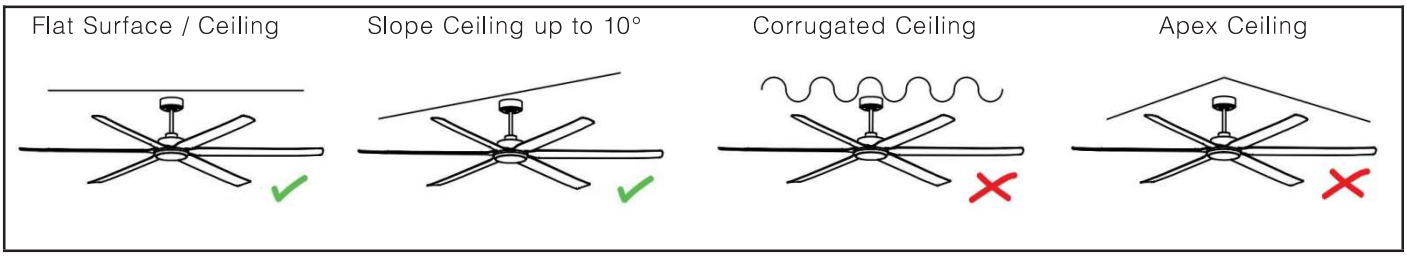

CAUTION
READ INSTRUCTIONS CAREFULLY FOR SAFE INSTALLATION AND FAN OPERATION

MUST BE INSTALLED BY A LICENSED ELECTRICIAN

E: info@fourseasonsliving.com.au
W: fourseasonsliving.com.au

FOUR SEASONS

SAFETY PRECAUTIONS

WARNING:

To ensure safe operation, this fan requires a complete electrical isolation switch (all-pole disconnection type) installed in the fixed wiring, as mandated by AS/NZS 60335-1, clause 7.12.2.

The warranty becomes void if the product was installed without an all-pole disconnection as per the instruction manual by a qualified and licensed electrician.

Example: When a ceiling fan's electrical circuit is equipped with an all-pole safety switch at the switchboard for isolation, it achieves all-pole disconnection as specified in AS/NZS 60335.1, clause 7.12.2.

IMPORTANT: An isolation switch must be included as part of the installation by the electrician.

1. Limited Use: This appliance is not designed for use by individuals (including children) with reduced physical, sensory, or mental abilities, or those lacking experience or knowledge, unless supervised or instructed by a responsible person.
2. Child Supervision: Children must be supervised to prevent them from playing with the appliance.
3. Weight Capacity: The mounting structure must support at least 20kg.
4. Ceiling Support: Secure mounting requires solid bracing (timber noggins or joists) in the ceiling. If unavailable, install a timber support secured to the joists. Metal grid ceilings are unsuitable.
5. Bracing Support: The bracing must be firmly secured to the back of any non-structural ceiling panel (e.g., gyprock, plaster) for safety and quiet operation.
6. Blade Clearance: For safe and effective operation, maintain a minimum fan blade clearance of 2.1m from the floor.
7. Professional Installation: Installation must be performed by a licensed electrician.
8. WARNING: If unusual wobbling or oscillation occurs, immediately stop using the fan and contact the manufacturer.
9. WARNING: Light and fan must be on the same phase. Before servicing, ensure both light and fan circuits are disconnected.

BEFORE INSTALLATION

UNPACK THE CEILING FAN CAREFULLY AND IDENTIFY ALL PARTS.

FAN ONLY MODEL

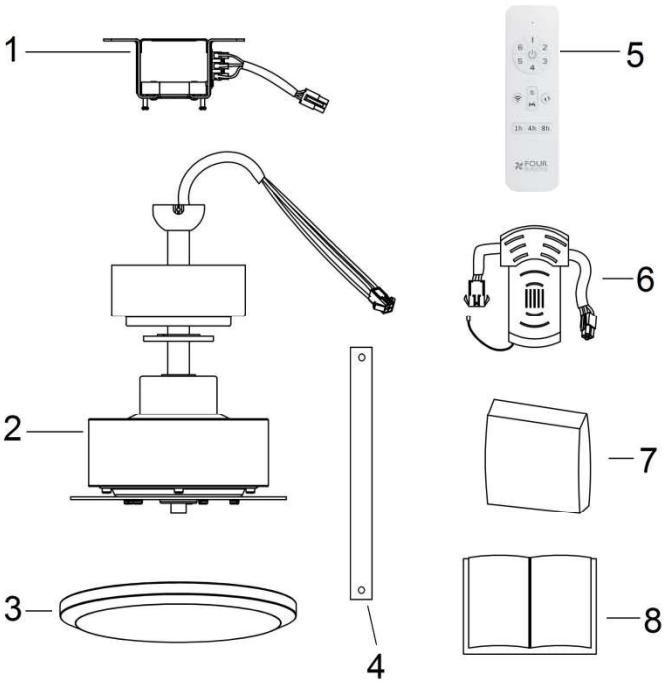

Part List:-

1. 1x hanging bracket
2. 1x motor assembly
3. 1x no light plate
4. 1x additional 10” (254mm) hanging tube
5. 1x remote transmitter
6. 1x remote receiver
7. 1x screw and balancing kit
8. 1x instruction manual

FAN + LED LIGHT MODEL

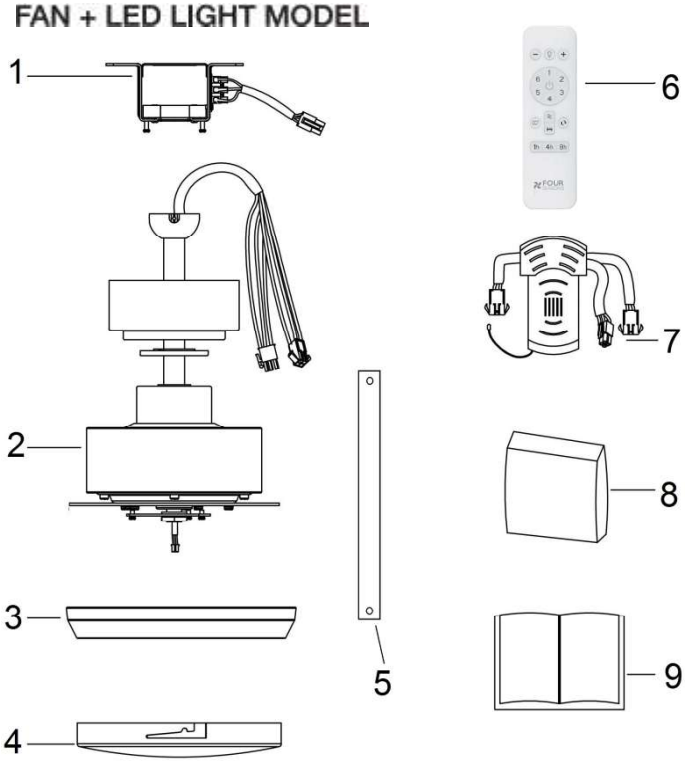

Part List:-

1. 1x hanging bracket
2. 1x motor assembly
3. 1x LED light kit
4. 1x light shade
5. 1x additional 10” (254mm) hanging tube
6. 1x remote transmitter
7. 1x remote receiver
8. 1x screw and balancing kit
9. 1x instruction manual

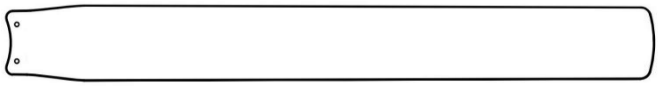

Blade Pack: 6x Blades (Sold seperately)

PLEASE NOTE: Check for any damage to the fan prior to installation.
Physical damage such as marks and scratches are not covered by the in-home warranty.
In this case, please contact the Four Seasons support team to discuss replacement parts.

E: info@fourseasonsliving.com.au
W: fourseasonsliving.com.au

FOUR SEASONS

BEFORE INSTALLATION

MOUNTING BRACKET

- The ceiling fan must be installed in a location where the blades have a minimum 300mm spacing from the tip of the blade to the nearest objects or walls.
- Secure the mounting bracket to a ceiling joist/structure that can carry a load of at least 20kg with included screws, ensuring 30mm minimum screw penetration.

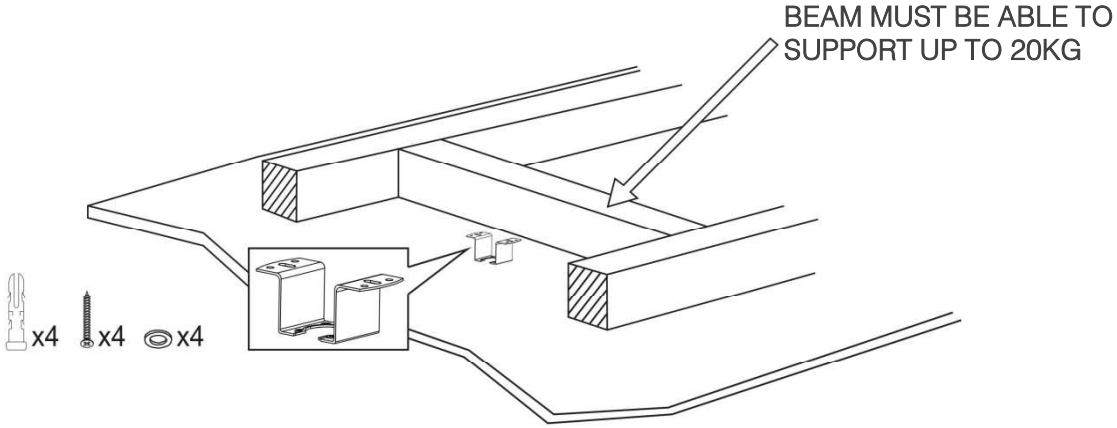

NOTE:THIS PICTURE IS FOR ILLUSTRATIVE PURPOSES ONLY AND DOES NOT REPRESENT THE ACTUAL BRACKET.

BLADE INSTALLATION

Install the blades to the bottom of the motor. Tighten and secure blade with screw and washer provided. Repeat this procedure until all blades are installed.

NB: Ensure the blades do not get damaged or bent during the installation process while the fan maybe on the ground, this will affect the performance and balance of the fan and this is NOT covered under warranty.

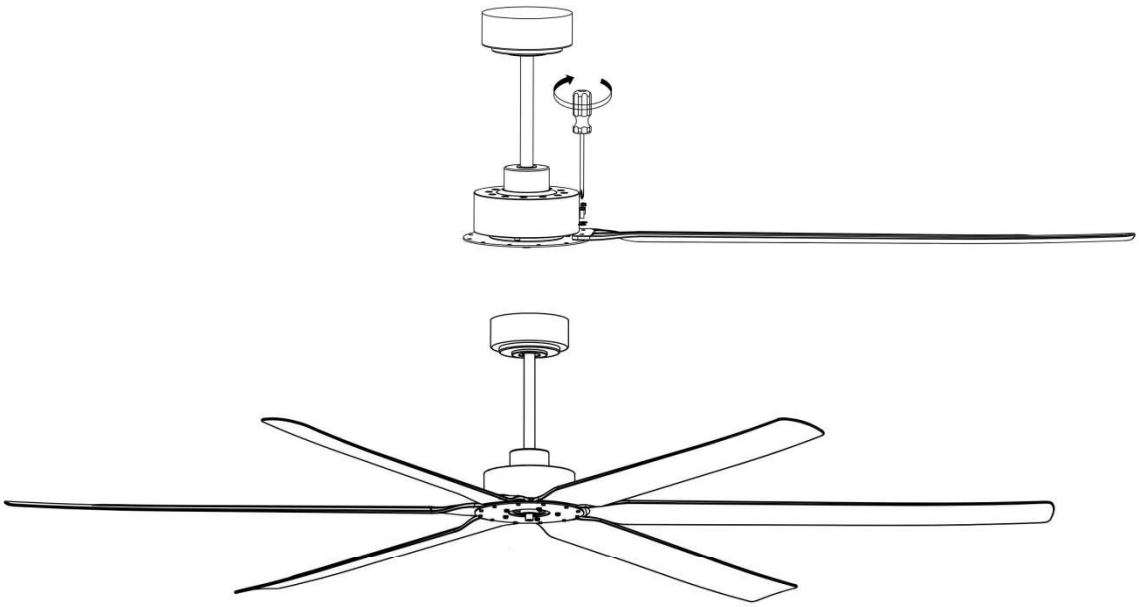

E: info@fourseasonsliving.com.au
W: fourseasonsliving.com.au

FOUR SEASONS

BEFORE INSTALLATION

If the fan is a no light version, simply attach the bottom plate to the centre hub, after the blades have been installed, by lining up the threaded rod and turning the plate on until it can no longer turn further.

If the fan has a light, after the blades have been fitted, attach the light kit supplied in the box to the bottom of the fan and affix using the 3 screws supplied. Carefully plug in the plug coming from the centre of the fan into the corresponding plug on the light kit. The diffuser supplied is a simple clockwise or counterclockwise turn to install or remove it from the light base.

FAN ONLY MODEL

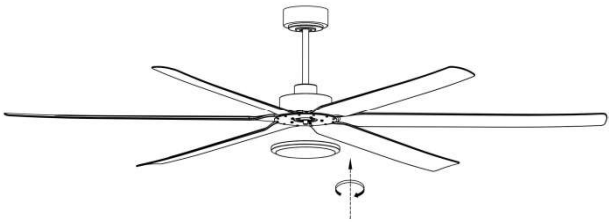

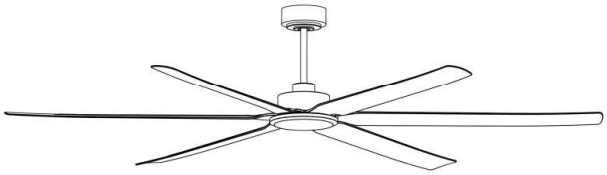

FAN + LED LIGHT MODEL

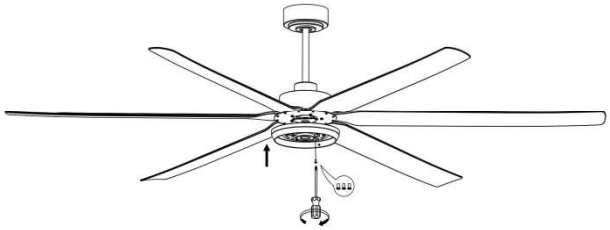

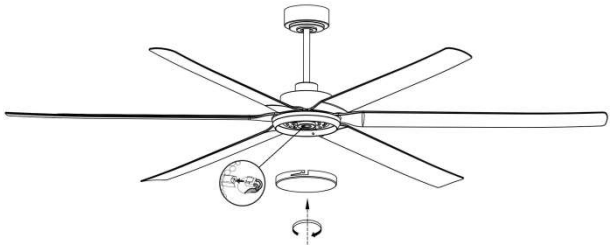

Align the convex point on the light plate with the gap on the LED mounting plate and press down firmly while twisting on.

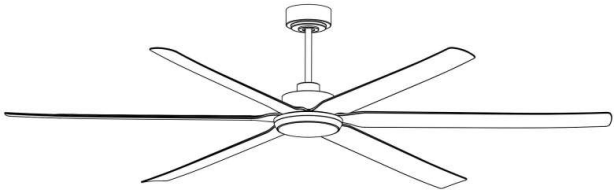

MOUNTING BRACKET INSTALLATION

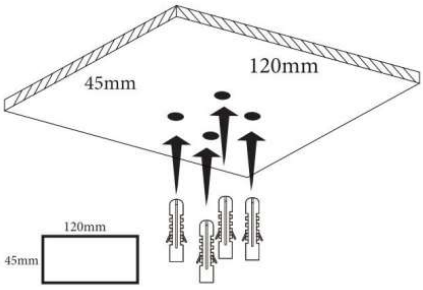

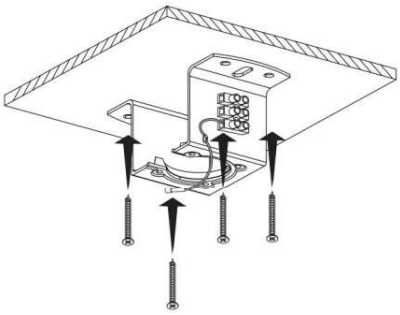

Minimiun Wood Size For Installaion.
Align the bracket and screw the hanger bracket to the ceiling tightly.

E: info@fourseasonsliving.com.au
W: fourseasonsliving.com.au

FOUR SEASONS

HANGING THE FAN

Carefully lift the fan assembly onto the mounting bracket, ensuring the hanger ball slot (A) is completely seated and engaged with the mounting bracket tab (B). This proper engagement (C) prevents fan rotation during operation.

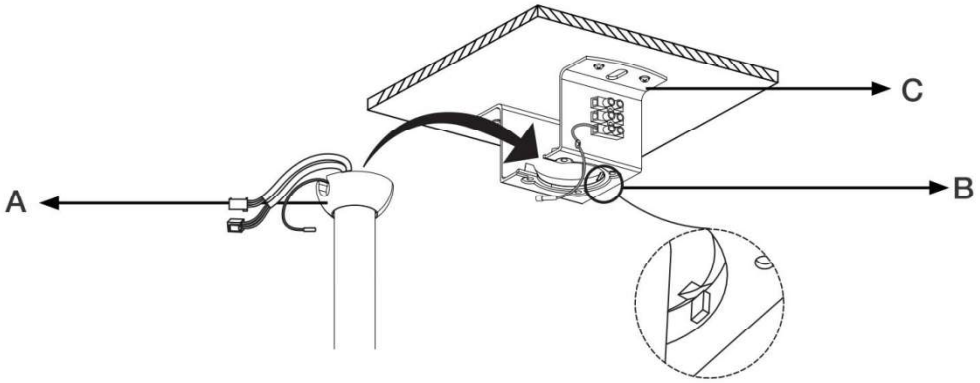

ANGLED CEILING INSTALLATION

This fan hanging system supports a maximum slope of 10 degree ceiling. If there is a greater slope, then an angle ceiling canopy accessory kit is required.

IMPORTANT: To maintain safety and functionality on raked ceilings, the hanging bracket tab (B), which engages with the hanging ball groove (A), must be installed at the highest point of the ceiling.

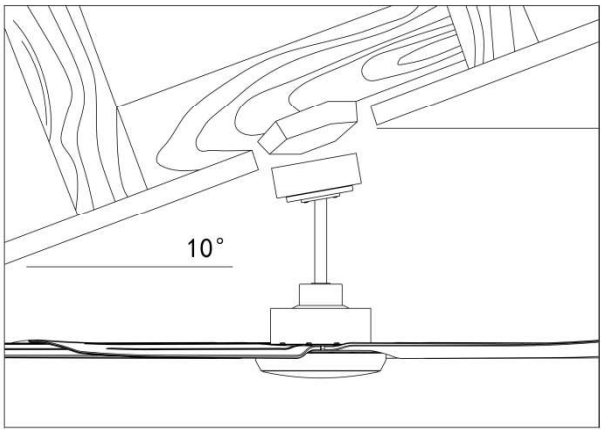

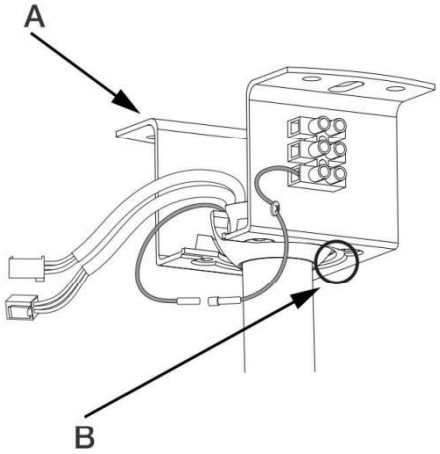

E: info@fourseasonsliving.com.au
W: fourseasonsliving.com.au

FOUR SEASONS

INSTALL RECEIVER REMOTE CONTROL

Wire up the receiver with quick connectors and insert into the mounting bracket. Make sure the antenna wire is safely folded inside the canopy cover before final assembly. (Do not cut the antenna wire). Make sure the power is off at the mains before commencement of installation.

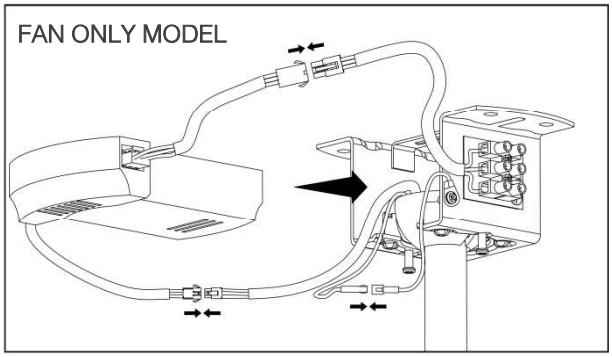

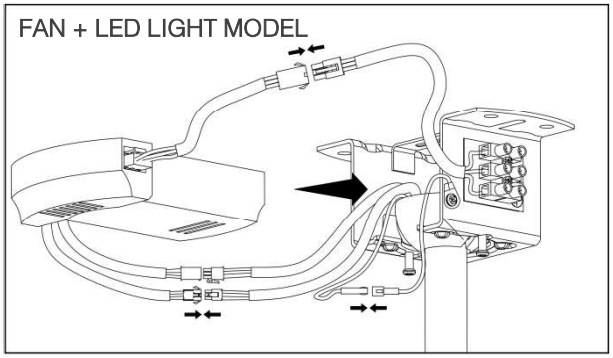

IMPORTANT REMINDERS

- Receiver must be correctly installed within the mounting bracket.
- When the transmitter cannot control the receiver, please check:
  i) has sufficient battery in the transmitter, even if the indicator light on transmitter lights up there may not be enough voltage to transmit a command.
  ii) any existence of similar remote controlled products nearby that cause interference.
- Replace battery if getting low as this will affect transmitter sending commands.
- Take the battery out from the transmitter when leaving unused for a long time to avoid battery leaks.
- Isolation switch much be connected in the line.

FINISHING THE INSTALLATION

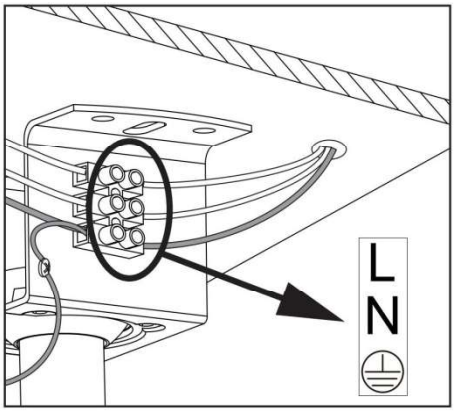

Fix the Earth cable and complete all electrical connections at the mounting bracket.
NOTE: This fan is a Class I elecrical product

E: info@fourseasonsliving.com.au
W: fourseasonsliving.com.au

FOUR SEASONS

FINISHING THE INSTALLATION

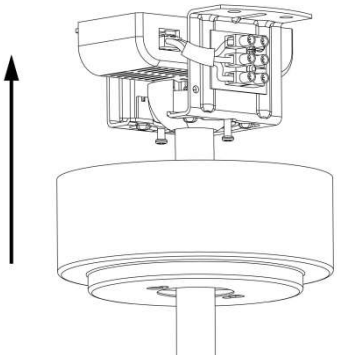

Slide the canopy upward onto the mounting bracket and rotate it counter-clockwise to lock it in place. Check if the both mounting bracket tabs are fully engaged within the canopy slots. The canopy should have an approximate 3mm gap from the ceiling.

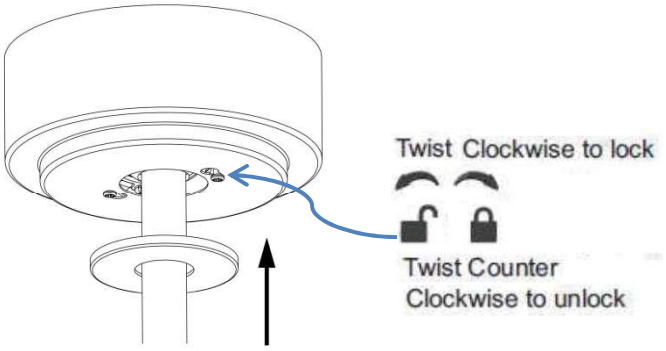

Ensure all wires are tucked neatly into the canopy to avoid any damage.

PLEASE NOTE: Ensure the canopy has fixed fully into position by twisting firmly.

ELECTRICAL WIRING DIAGRAM

WARNING: It is the purchaser's responsibility to ensure that the installation of Four Seasons product has been carried out by a certified electrician as per the guidelines of this instruction manual.

- Connect "LIVE" supply to the "L" of the terminal block on the mounting bracket.
- Connect "EARTH" supply wire to the ⏚ of the terminal block on the mounting bracket.
- Connect "NEUTRAL" supply to "N" of the terminal block on the mounting bracket.
- Screw "EARTH" cable from motor to cavity to ⏚ on the mounting bracket.

Please note:
This is only applicable to Models with a LED light →

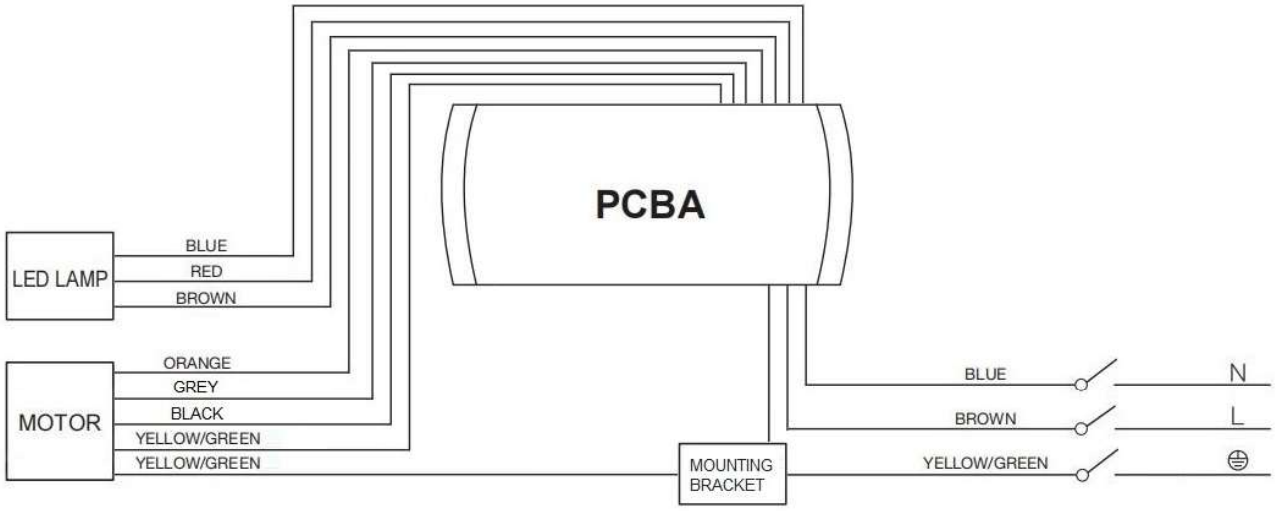

E: info@fourseasonsliving.com.au
W: fourseasonsliving.com.au

FOUR SEASONS

REMOTE CONTROL

PLEASE NOTE: The remote handset cannot be used either simultaneously or in conjunction with a wall controller. Unless otherwise advised by Four Seasons.

FAN ONLY MODEL	
⏻	Fan off only.
🛏	Sleep Mode: turns on the fan at an extra lower speed to create a gentle breeze.
Fan Speeds	Speed button 1= lowest fan speed, 6= highest fan speed.
≋	Wind Mode: 1-6 fan speed changes randomly to feel the breeze (designed for the elderly and children)
↻	Summer/Winter Reverse Mode: forward (spins clock wise with highest part of the blade trailing) and reverse (spins counter clock wise with highest part of the blade leading).
📶	Entering WiFi Pairing mode
1h/4h/8h	Preset timer for fan and light to stop automatically. E.g. if timer set at 1h and then 4h, fan will stop at 4h. Setting default to last press. To engage time this has to be last button pressed after selecting speed, pushing any other button after selecting timer will cancel it.

FAN + LED LIGHT ONLY MODEL	
⏻	Fan off only.
🛏	Sleep Mode: turns on the fan at an extra lower speed to create a gentle breeze.
Fan Speeds	Speed button 1=lowest fan speed, 6= highest fan speed.
≋	Wind Mode: 1-6 fan speed changes randomly to feel the breeze (designed for the elderly and children)
↻	Summer/Winter Reverse Mode: forward (spins clock wise with highest part of the blade trailing) and reverse (spins counter clock wise with highest part of the blade leading).
1h/4h/8h	Preset timer for fan and light to stop automatically. E.g. if timer set at 1h and then 4h, fan will stop at 4h. Setting default to last press. To engage time this has to be last button pressed after selecting speed, pushing any other button after selecting timer will cancel it.
💡	Light on/off.
CCT	Changeable colour temperature, 2700K (warm white) up to 6000K (cool white)
+/-	+ = increase light brightness, - = decrease light brightness

E: info@fourseasonsliving.com.au
W: fourseasonsliving.com.au

FOUR SEASONS

REMOTE CONTROL OPERATION

A remote control consists of two parts:
1. Handset / controller (transmitter).
2. Receiver (receives message from the handset and is located in the upper canopy of the fan)

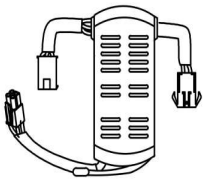

IMPORTANT: If you have multiple fans in the house, you must pair them one at a time to their corresponding transmitter. Power must not be on to other fans while pairing or you will inadvertently pair multiple fan's to only one transmitter. If this occurs, you need to use the reset function and begin re-pairing with power only on to the fan being paired.

Pairing the remote control:

Step 1: Turn on the ceiling fan.

Step 2: Within the first 20 seconds, continue pressing the button with the symbol ⏻ until you hear a beep sound. It is paired. If you don't hear a beep sound, turn off the ceiling fan and start step 1 and step 2 again.

Step 3: Open Smart life app and click add device and fan should automatically appear press connect. Fan should now be controllable via the smart life app (see following page).

To unpair the remote control:

Push and hold "4h" "8h" "⏻" at the same time for 5 seconds. The remote is unpaired after a "beep" sound.

Pairing with WIFI:

Please ensure your smart phone or device is connected to a 2.4Ghz WI-FI network.
Pairing will NOT work with a 5Ghz WI-FI network.
Please ensure the fan is within range of the WI-FI router.
Please follow instructions in the following pages to pair the fan with smart devices.

Entering WiFi Pairing mode: Fan Only Version

1.Turn on the power.
2.Within the first 20 seconds, press and hold the “ ” button until a “beep” is heard.
3.Continue step connect on your smart devices to complete the pairing.
If you don’t hear a “beep” sound, repeat the above steps.

Entering WiFi Pairing mode: FAN+LED Light Version

1.Turn on the power.
2.Within the first 20 seconds, press and hold the “ ” button until a “beep” is heard.
3.Continue step connect on your smart devices to complete the pairing.
If you don’t hear a “beep” sound, repeat the above steps.

E: info@fourseasonsliving.com.au
W: fourseasonsliving.com.au

FOUR SEASONS

SMART LIFE MATCHING PROCESS

Smart Life matching process, please follow the steps:

1.Download the “Smart Life” APP on your smart devices by scanning the QR code below with camera.

2.Turn on WiFi and Bluetooth on your smart devices. Ensure it’s connected to a 2.4GHZ WiFi.

3.Open the APP, follow the steps to register new user account or login existing account.

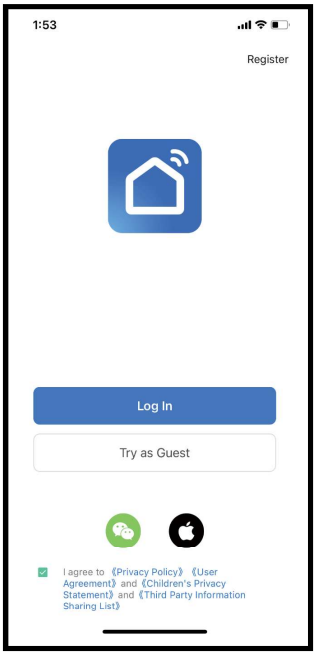

4.Follow instructions in main manual (steps can also be found on the back of the remote) to put the fan into WiFi pairing mode. If the operation is successful, go to step 5. If the fan has previously been paired or you can’t get it to work, please go to step 4 to RESET the fan.

5.RESET the fan. This step is NOT necessary if the fan has successfully entered WiFi pairing mode in the last step, if not, try to RESET the fan: turn on the fan, power off after 10 seconds, power on again after 15 seconds, long press “Fan Stop” for 5 seconds, if "beep beep" are heard, the reset is successful. If "beep beep" is not heard, the reset is failed, please repeat this step.

6.Once the fan has entered WiFi pairing mode, open the APP again on the smart device. Click “Add Device” in the middle or the “+” on the top right of the screen.

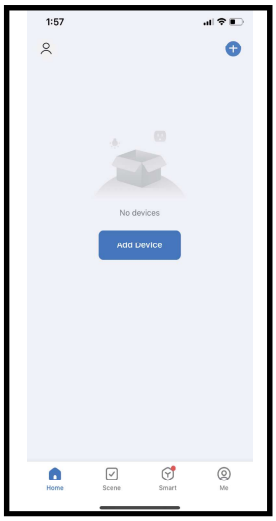

7.The auto scan should begin automatically, and the fan should show up at the top of screen within a few seconds.

Note: If the fan is not showing up, you can add it manually by clicking and navigate to: >Add Manually >Small Home Appliance > Fan

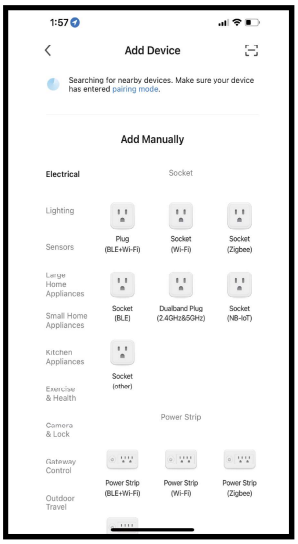

E: info@fourseasonsliving.com.au
W: fourseasonsliving.com.au

FOUR SEASONS

SMART LIFE MATCHING PROCESS

8.Follow instructions in the APP to finish the set up.

①

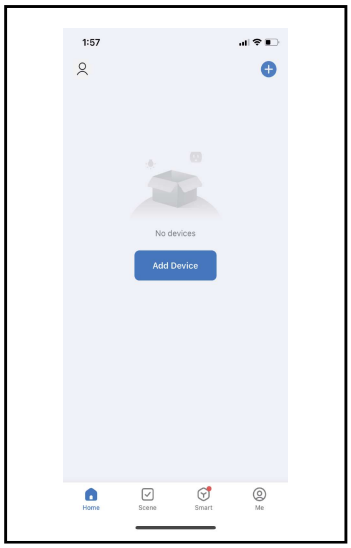

② Automatic Search

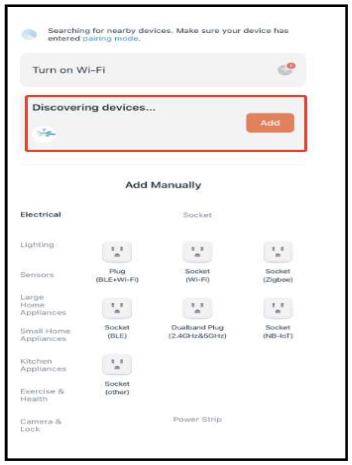

② Manually Add

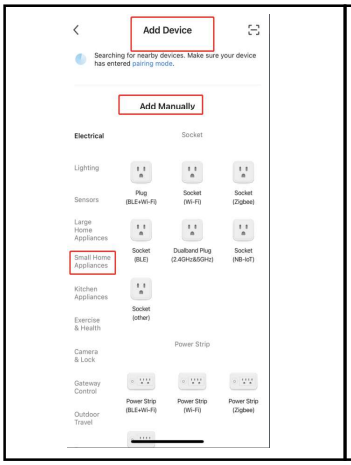

③

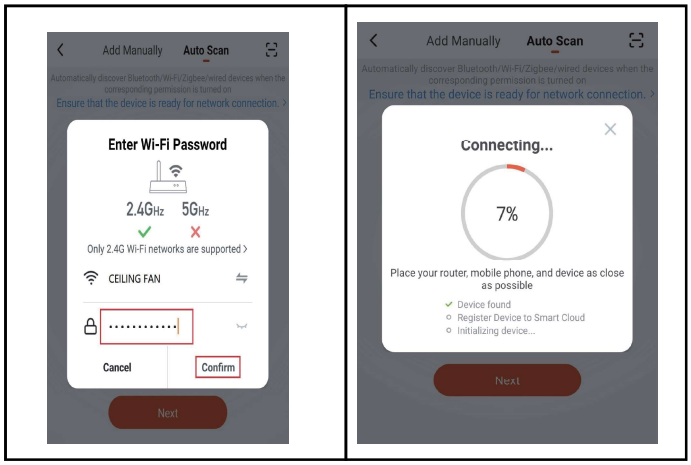

④

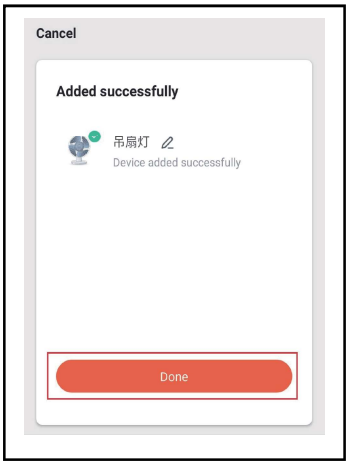

E: info@fourseasonsliving.com.au
W: fourseasonsliving.com.au

FOUR SEASONS

IMPORTANT FACTS

Fan Operation:
The DC ceiling fan has been designed for a very fast installation, maximise airflow with minimal energy usage and operate as quietly as possible. Unlike high-speed traditional fans, ceiling fans generate a gentle, high-volume airflow that promotes evaporative cooling. This method is highly effective for cooling people and consumes significantly less power than air conditioning

Remote controlled fans must be installed with an isolation switch on the wall.

Warranty is void if parts are used that are not Four Seasons products, including but not limited to remote controls, receivers, led lights, switches, wall control, dimmers, extension rods and angle canopies.

Pairing multiple fans to one remote - Pair fan 1 using the pairing instructions, using the same remote pair fan 2 in the same way with power on to all fans to be paired to the transmitter.

When using the timer, the timer button must be the last button pressed, if another button is pressed after the timer button, the timer is cancelled.

This remote has a memory function, this means if there is a power outage, the fan will restore the same function as when the power was cut. If the isolation is switched off and then turned back on, the fan will resume the function it was operating at, before being switched off.

Normal Wear and Tear:
Normal wear and tear, such as loose screws or increased noise due to moving parts, and damage from accidental contact are not covered under warranty. However, regular maintenance, including tightening screws and changing batteries seasonally, can significantly reduce these issues

Night Noise:
It's important to know that while the DC ceiling fan is designed for quiet operation, all electric motors make some noise. If you hear a humming sound, it may be due to ripple control signals from your electricity provider, which is normal. Also, a short beep will sound when you use the remote, confirming the fan has received your instruction.

E: info@fourseasonsliving.com.au
W: fourseasonsliving.com.au

FOUR SEASONS

MAINTENANCE

CARE AND CLEANING:

IMPORTANT: For your safety, always disconnect the power at the main switch before any fan maintenance or cleaning.

- Never submerge the ceiling fan in water or any liquids. This can cause damage to the motor and blades, and create an electrical shock hazard.
- Avoid contact with organic solvents or cleaners on any part of the fan.
- Clean the fan blades with a damp, clean cloth only. Do not use organic solvents or cleaners.
- The motor's bearings are permanently lubricated; no oiling is required.

TROUBLE SHOOTING

SIMPLE TROUBLESHOOTING	
Symptoms	**Troubleshooting**
Fan not responding to remote	Is isolation switch turned on?
	Is there new batteries in the remote?
	Is the remote paired using the pairing instructions on the website?
Ticking sound	Tighten all nuts, bolts and screws.
	Check installation.
	Is the fan clean and free of debris, insects or any foreign matter?
Fan not moving air (cooling) as expected	To cool the room the fan should be spinning anti-clockwise
WiFi fan not pairing (If fan is WiFi enabled)	Ensure 2.4GHz WiFi connection, 5G connection will not allow the fan to connect.

FAQs	
Question	**Answer**
Receiver beeping when I press the buttons on the remote.	This is a setting that cannot be switched off, it is to confirm that the command has been received by the fan
What happens if I have a power outage?	These fans have memory and will resume the settings prior the power outage, if pairing is lost in the outage, please follow remote pairing instructions

E: info@fourseasonsliving.com.au
W: fourseasonsliving.com.au

FOUR SEASONS

WARRANTY INFORMATION

For technical support, please contact Four seasons customer service hotline at **(02) 8778 7570**. This fan is suitable for both indoor and covered outdoor areas, as defined in our warranty statement.

To ensure the fan remains in optimal condition, it should be protected from the elements. Exposure to excessive wind, dust, water, or salt air may cause damage that will not be covered under the warranty.

If your fan includes a light, do not remove the light panel, as doing so may cause damage not covered by the warranty. For assistance, feel free to reach out to our customer service team.

If you suspect any issues with the installation, please contact your installer to resolve the matter. In case you believe the issue is related to a manufacturing defect, you can file a warranty claim by visiting https://fourseasonsliving.com.au/warranty-claim-form/ or scan below QR code.

IMPORTANT NOTICE: All claims for warranty must be accompanied with the following three documents:

1. Copy of the Installation Receipt OR Tax Invoice OR Certificate of Compliance for the installation of the Four Seasons product from the installing electrician.
2. Copy of the Purchase Receipt for the Four Seasons product, and accessories such as extension rod or remote control.
3. Submit an online warranty claim form. Please ensure that the purchaser's full name and contact details are clearly stated, in addition to the full nature of the fault and the serial or P.O. number which can be located on the top motor housing above the Ceiling Fan Blades.

It is the responsibility of the purchaser to keep the documents required for a warranty application for the duration of the warranty period.

Customer Service operates between 8AM to 4PM EST Monday to Friday.
Customer Service Number: (02) 8778 7570

E: info@fourseasonsliving.com.au
W: fourseasonsliving.com.au

FOUR SEASONS